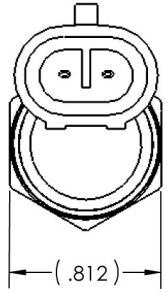

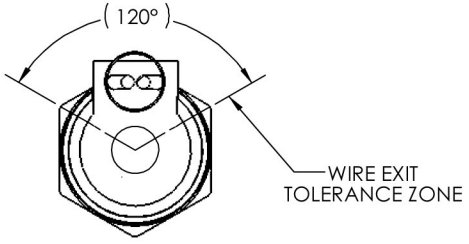

SECTION B-B

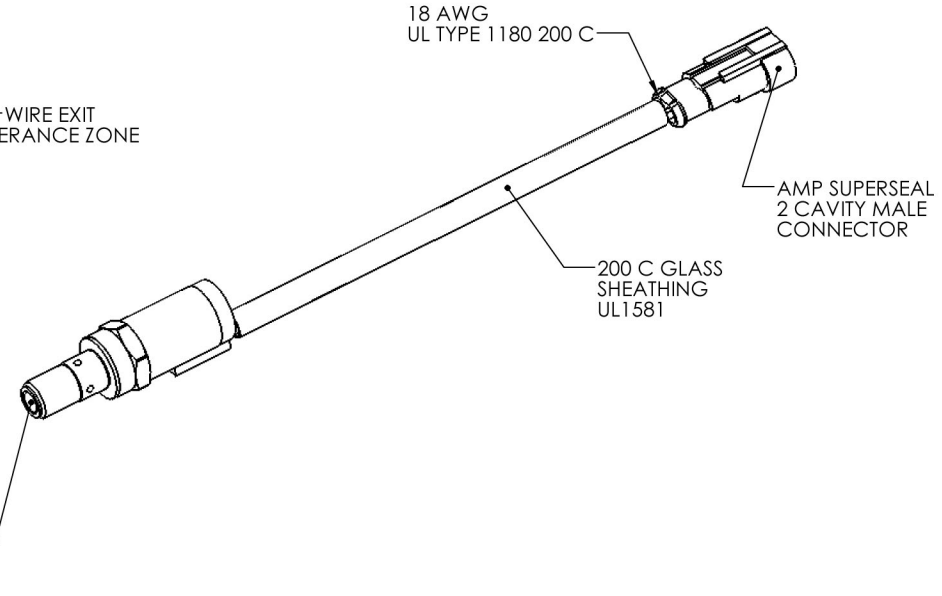

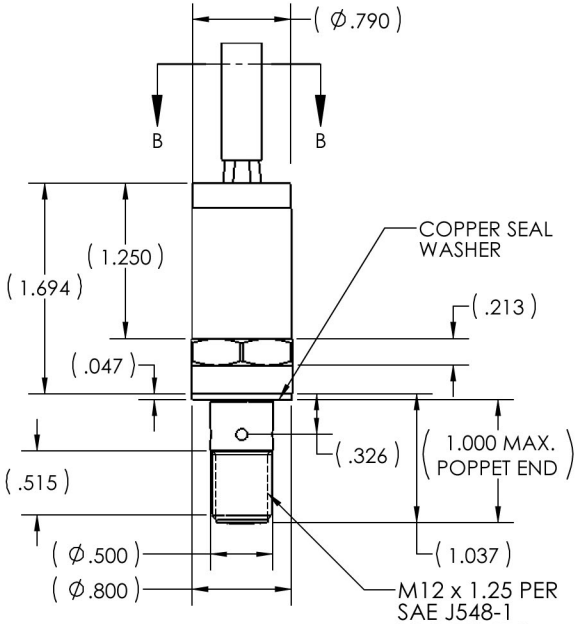

M12 x 1.25 PER
SAE J548-1
LOCTITE 516
30-50% DRY FILL
4-5 THDS 360DEG COVERAGE
2-3 THD LEAD

UNLESS OTHERWISE SPECIFIED:		NAME	DATE	TLX TECHNOLOGIES
DIMENSIONS ARE IN INCHES TOLERANCES: ANGULAR: 1° TWO PLACE DECIMAL ±.01 THREE PLACE DECIMAL ±.005	DRAWN			TITLE: PRESSURE RELEASE SOLENOID VALVE
	CHECKED			
	ENG APPR.			
	MFG APPR.			
INTERPRET GEOMETRIC TOLERANCING PER:	Q.A.			
MATERIAL -	COMMENTS:			SIZE / DWG. NO. / REV
FINISH				
DO NOT SCALE DRAWING				SCALE: 2:1 / WEIGHT:

PROPRIETARY AND CONFIDENTIAL

THE INFORMATION CONTAINED IN THIS DRAWING IS THE SOLE PROPERTY OF TLX TECHNOLOGIES. ANY REPRODUCTION IN PART OR AS A WHOLE WITHOUT THE WRITTEN PERMISSION OF TLX TECHNOLOGIES IS PROHIBITED.